C 5915-2CS5V/C4S3GEM9

CARB toroidal roller bearings are unique: as well as accommodating misalignment without increased stress levels, they also provide frictionless axial movement within the bearing in the non-locating position in self-aligning bearing arrangements. This bearing has a lower speed rating and is sealed to minimize the need for lubrication and extend service life.

- Accommodate misalignment and axial displacement within the bearing
- High radial load carrying capacity
- Provide frictionless axial movement
- Long bearing system life
- Sealed for increased reliability

Bore type	Cylindrical

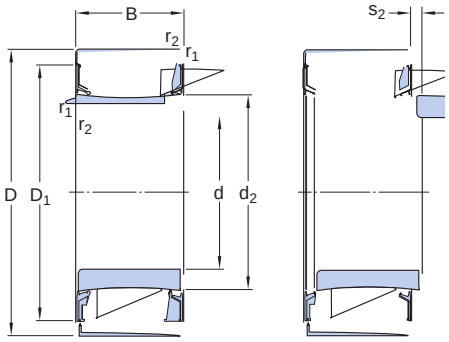

Dimensions

d	75 mm	Bore diameter
D	105 mm	Outside diameter
B	40 mm	Width
d_2	≈ 82.9 mm	Shoulder diameter of inner ring
D_1	≈ 96.1 mm	Shoulder or recess diameter of outer ring
s_2	max. 5 mm	Permissible axial displacement
$r_{1,2}$	min. 1 mm	Chamfer dimension

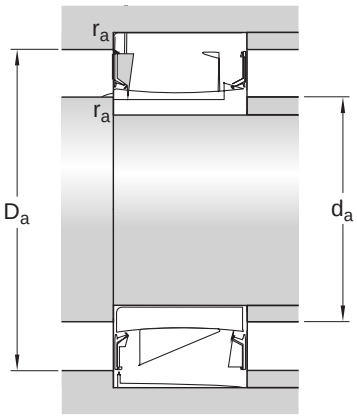

Abutment dimensions

d_a	min. 79.6 mm	Diameter of shaft abutment
d_a	max. 84.1 mm	Diameter of shaft abutment
D_a	min. 85 mm	Diameter of housing abutment
D_a	max. 100 mm	Abutment diameter housing
r_a	max. 1 mm	Radius of fillet

AGA BEARINGS

Calculation data

AGA performance class		AGA Explorer
Basic dynamic load rating	C	166 kN
Basic static load rating	C_0	232 kN
Limiting speed		130 r/min
Misalignment factor	k_1	0.083
Internal clearance factor	k_2	0.142

Tolerances and clearances

GENERAL BEARING SPECIFICATIONS

- Tolerances: Normal, P5, tapered bore 1:12, tapered bore 1:30
- Radial internal clearance: cylindrical bore, tapered bore

BEARING INTERFACES

- Seat tolerances for standard conditions
- Tolerances and resultant fit

AGA BEARINGS